TECHNICAL SPECIFICATIONS

TELECOMMUNICATIONS GROUNDING BAR – TGB

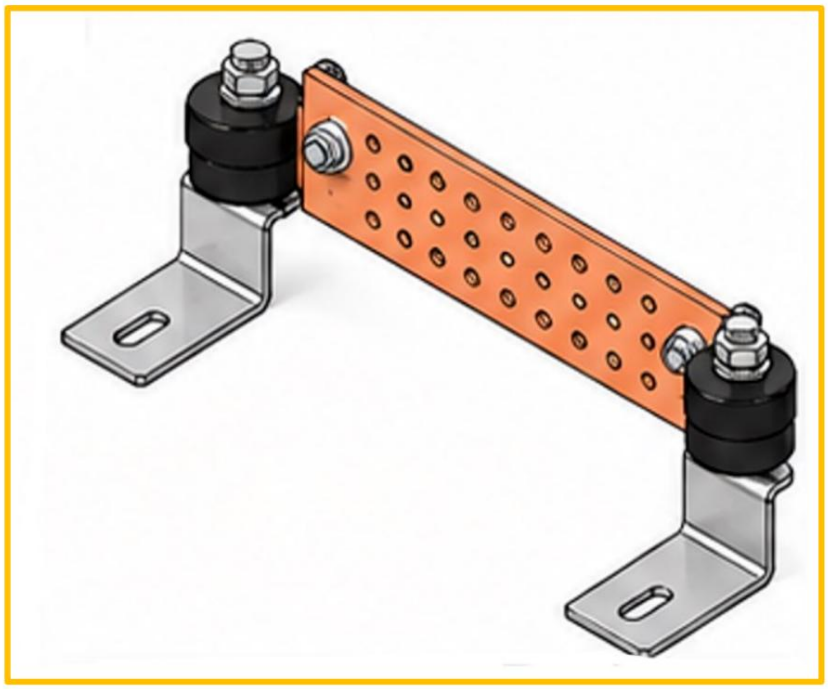

FEATURE	TECHNICAL SPECIFICATION
Material	High conductivity electrolytic copper, 100% copper.
Guy	Telecommunications grounding busbar (TGB).
Approximate dimensions	12 inches long × 4 inches high.
Minimum thickness	1/4 inch.
Perforations Ø 0.44”	Minimum 12 perforations.
Perforations Ø 0.31”	Minimum 24 perforations.
Connections	Using certified compression connectors for earthing conductors.
Insulation and assembly	Dielectric insulators and mounting brackets/supports for secure installation on telecommunications structures or racks.

FEATURE	TECHNICAL SPECIFICATION
Integration into the SPT	Connection to the general grounding system using a conductor suitable for outdoor installation.
Applications	Equipotentialization and grounding of waveguides, coaxial cables, RF equipment and other telecommunications elements.

REGULATIONS AND REFERENCES

It complies with recognized standards and practices for telecommunications grounding and equipotential bonding: **ANSI/TIA-607, BICSI J-STD-607, UL and/or ISO/IEC 30129.**

NOTE: The dimensions indicated are approximate.