# GROUNDING BAR FOR CONNECTIONS STAINLESS STEEL EQUIPOTENTIALS

Equipotential busbar in stainless steel designed for the general interconnection of masses, screens and down conductors of the grounding system, guaranteeing a long service life in aggressive environments.

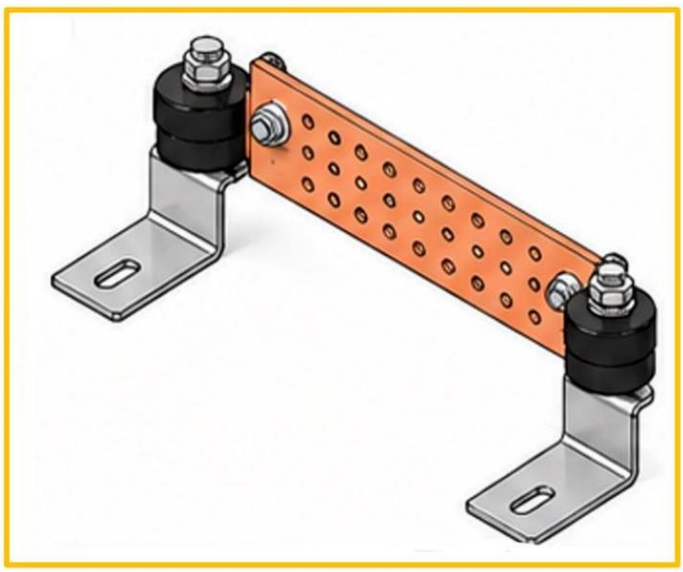

| FEATURE | TECHNICAL SPECIFICATION |
|---|---|
| **Product** | Busbar / Equipotential Collector Busbar for Commissioning Land |
| **Material** | High quality stainless steel (AISI 304 / AISI 316) |
| **Mechanical Properties** | Exceptional resistance to environmental, saline and chemical corrosion |
| **Connection Points** | Machined terminals with perforations for cable glands or compression/screw connectors |
| **Insulation / Assembly** | It includes synthetic dielectric insulators and mounting brackets for wall or structure installation. |
| **Applications** | Main Grounding Bar (MET) or Bar Telecommunications Collector (TGB/TMGB) |

**REGULATIONS AND REFERENCES:**

Complies with IEC 62561-1, IEC 62305-3, RETIE, NTC 2050 and ANSI/TIA-607.

# ROUND ALUMINUM WIRE ROD Ø8 MM (50 MM²) FOR SPCR

Solid conductor in aluminum alloy optimized for the formation of upper collection meshes and lightning protection downpipes, offering lightness and ease of installation.



| FEATURE | TECHNICAL SPECIFICATION |
|---|---|
| **Product** | Round Wire Rod / Solid Aluminum Conductor |
| **Material** | Electrical grade aluminum alloy (AlMgSi / semi-hard) |
| **Nominal Diameter** | Ø 8 mm |
| **Cross Section** | 50 mm² |
| **Electrical Conductivity** | > 34 m/ÿ·mm² |
| **Approximate Weight** | ~0.135 kg/m (highly malleable and lightweight) |
| **Applications** | Roof-mounted lightning protection netting, and down conductors |

**REGULATIONS AND REFERENCES:**

In accordance with the requirements of IEC 62305, IEC 61024 and RETIE standards (Article 3.13.1.3.2).

# CONNECTOR TO PRESSURE STRUCTURES IN STEEL

# STAINLESS STEEL (TYPE N TEST 50 KA)

Robust pressure clamp for the rigid equipotential bonding of round downpipes on profiles and edges of metal structures, ensuring electrical continuity without perforations.




| FEATURE | TECHNICAL SPECIFICATION |
|---|---|
| **Product** | Connector / Clamp for Pressure Structures |
| **Material** | Stainless Steel (AISI 304 / AISI 316) |
| **Structure Thickness Range** | 3 mm to 18 mm (adjustable pressure clamp) |
| **Round Driver Range** | Suitable for round conductors from Ø 6 mm to 10 mm |
| **Classification / Test Type** | Certified with Type N (Normal Duty) Test of 50 kA on 10/350 ÿs waveform according to IEC 62561-1 |
| **Galvanic Immunity** | Designed to prevent bimetallic corrosion at the coupling with the tower structure or facade |
| **Applications** | Fixing and continuity of downpipes along metal profiles and railings |

**REGULATIONS AND REFERENCES:**

Tested and certified under international standard IEC 62561-1 and IEC 62305.

MATTBOSS
18740 CURRY POWDER LN
GERMANTOWN, MD 20874

# STAINLESS STEEL EQUIPOTENTIAL BARRIER 292 X 30 X 3.5 MM (6 CONNECTIONS)

Compact and certified equipotential busbar with 6 terminals for the safe integration of conductors and grounding screens in confined spaces or cabinets.

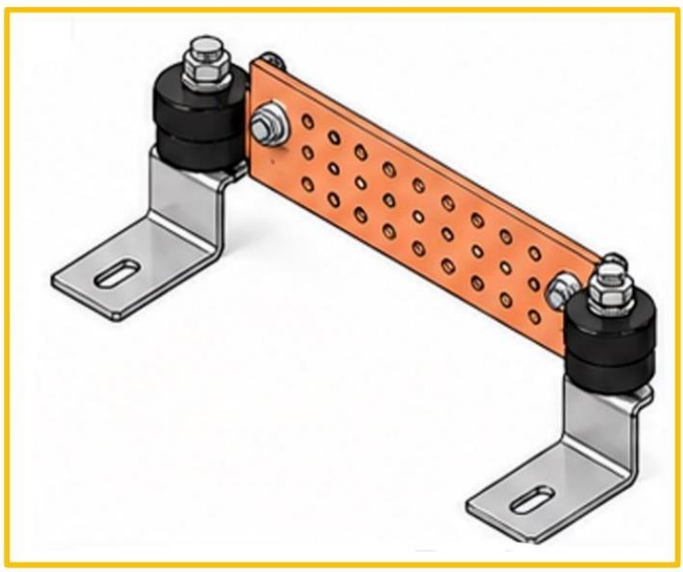

| FEATURE | TECHNICAL SPECIFICATION |
|---|---|
| **Product** | Equipotential Busbar with Insulators and Supports |
| **Material** | AISI 304 / 316 Stainless Steel |
| **General Dimensions** | 292 mm (length) × 30 mm (width) × 3.5 mm (thickness) |
| **Cross Section** | 105 mm² |
| **Number of Connections** | 6 connection terminals (M8/M10 screws included) |
| **Support and Insulation** | Mounted on dielectric apple-type insulators and fixing plates |
| **Applications** | Potential equalization points in equipment rooms, telecommunications towers and junction boxes |

**REGULATIONS AND REFERENCES:**

Prepared and tested according to IEC 62561-1 and IEC 62305 standards.

MATTBOSS
18740 CURRY POWDER LN
GERMANTOWN, MD 20874

# UNISTRUT RAIL / PERFORATED STEEL CHANNEL GALVANIZED 2×4 CM × 3 M

Slotted structural profile for channeled support for the installation and rigid guidance of downpipes and connectors in industrial and commercial installations.



| FEATURE | TECHNICAL SPECIFICATION |
|---|---|
| **Product** | Channel Rail / Perforated Unistrut C Profile |
| **Material** | Structural steel with galvanized coating<br>Hot-dip galvanized |
| **Section Dimensions** | 20 mm × 40 mm (2×4 cm / standard or low rise type) |
| **Standard Length** | 3.0 meters (3000 mm) |
| **Geometry** | Continuous oblong perforation at the base to facilitate mechanically adjustable anchoring |
| **Mechanical Resistance** | High load-bearing capacity against bending and stress<br>cutting |
| **Applications** | Support for cable trays, conduit pipes, busbar racks and SPCR downpipe installations |

**REGULATIONS AND REFERENCES:**

Complies with MFMA-4 (Metal Framing Manufacturers Association), ASTM A123, RETIE and NTC 2050 standards.

# SIMPLE KS TYPE CONNECTOR IN STAINLESS STEEL (Ø 6-10 MM)

KS type high compression single connection clamp for cross or parallel branch and splicing, eliminating the need for exothermic welding in aerial applications.



| FEATURE | TECHNICAL SPECIFICATION |
|---|---|
| **Product** | KS Type Single Connector/Clamp |
| **Material** | Stainless Steel AISI 316 / AISI 304 |
| **Round Driver Range** | Compatible with round conductors Rd Ø 6 mm to 10 mm |
| **Tightening Element** | M10 adjusting screw with flat and pressure washer in stainless steel |
| **Current Test** | Certified with Type N Test at 50 kA (10/350 ÿs waveform) |
| **Advantages** | It allows quick parallel, cross or branch connections in T without the need for welding |
| **Applications** | Interconnection of aluminum wire rod or cables steel/copper in water collection networks |

**REGULATIONS AND REFERENCES:**

Conforms to international standard IEC 62561-1 and IEC 62305-3.

# STRUCTURAL STEEL CONNECTION TERMINAL FOR GROUNDING (Rd/Rd and Rd/Fl)

Multipurpose universal terminal block designed for high mechanical strength connections between round conductors and busbars on metal base structures



| FEATURE | TECHNICAL SPECIFICATION |
|---|---|
| **Product** | Universal Grounding Terminal Block / Clamp |
| **Material** | Bare Structural Steel (for welding or splicing onto steel beams/ structures) |
| **Round/Round (Rd/Rd) configuration** | Cross connection (+ / II): Ø 6-20 mm / Ø 8-10 mm |
| **Round/Flat (Rd/Fl) configuration** | Cross connection (+ / II): Ø 6-20 mm / Flat plate 30 × 3-4 mm |
| **Fixing Screws** | M10 × 35 mm screw in high-strength steel |
| **Current Test** | Certified with Type N Test at 50 kA (10/350 ÿs) |
| **Applications** | Equipotential bonding to the building's metal structure, concrete reinforcement, and grounding grid |

**REGULATIONS AND REFERENCES:**

Compliant and tested according to IEC 62561-1 and IEC 62305 standards.